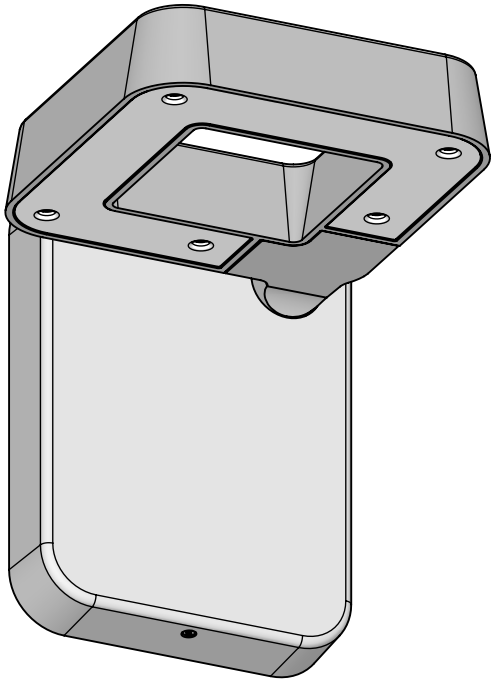

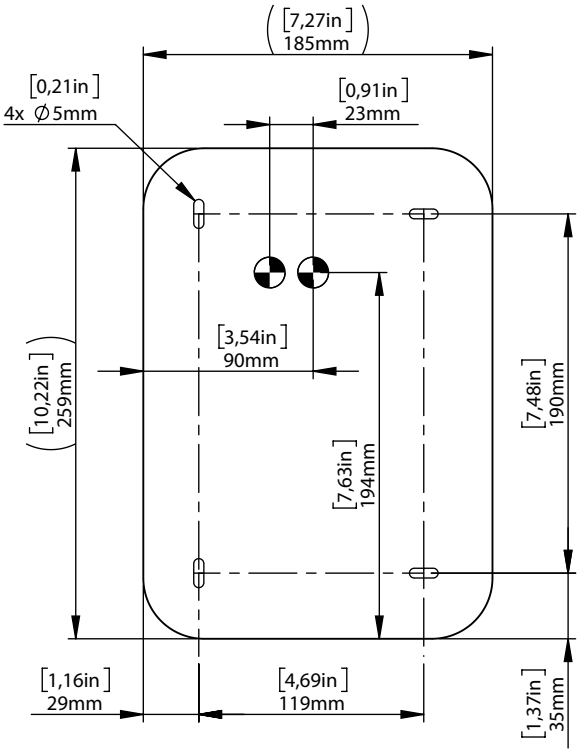

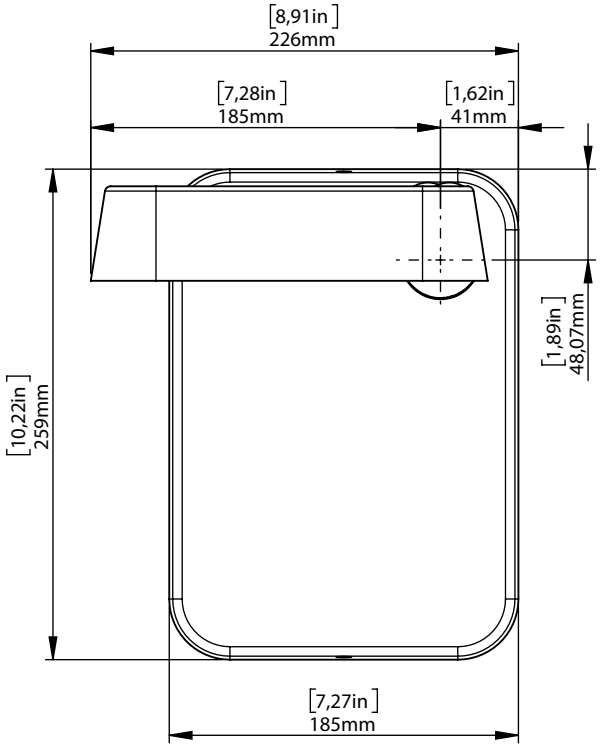

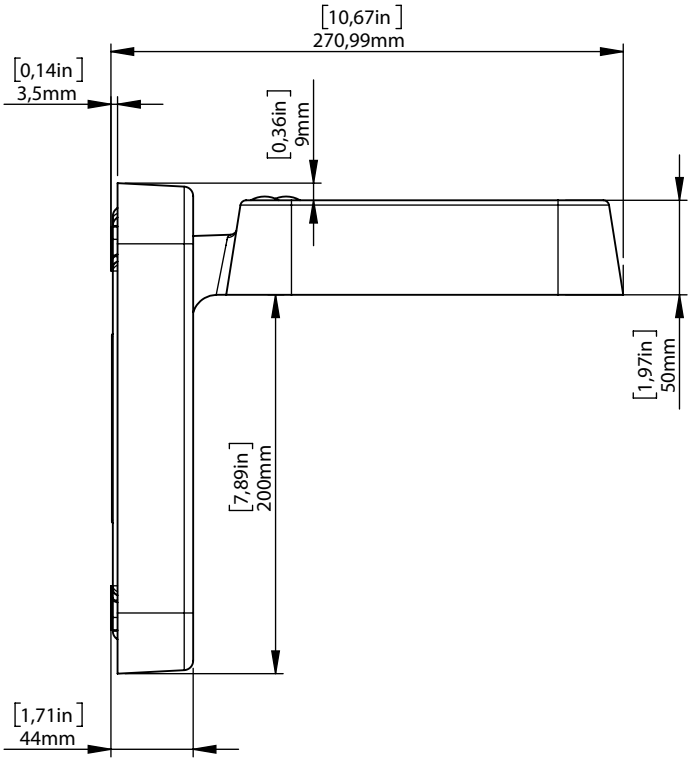

Square - PE156 - Model 1

: Cable passage

Measurement unit: millimetres / inches