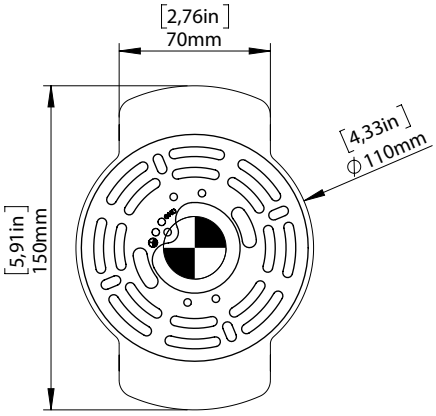

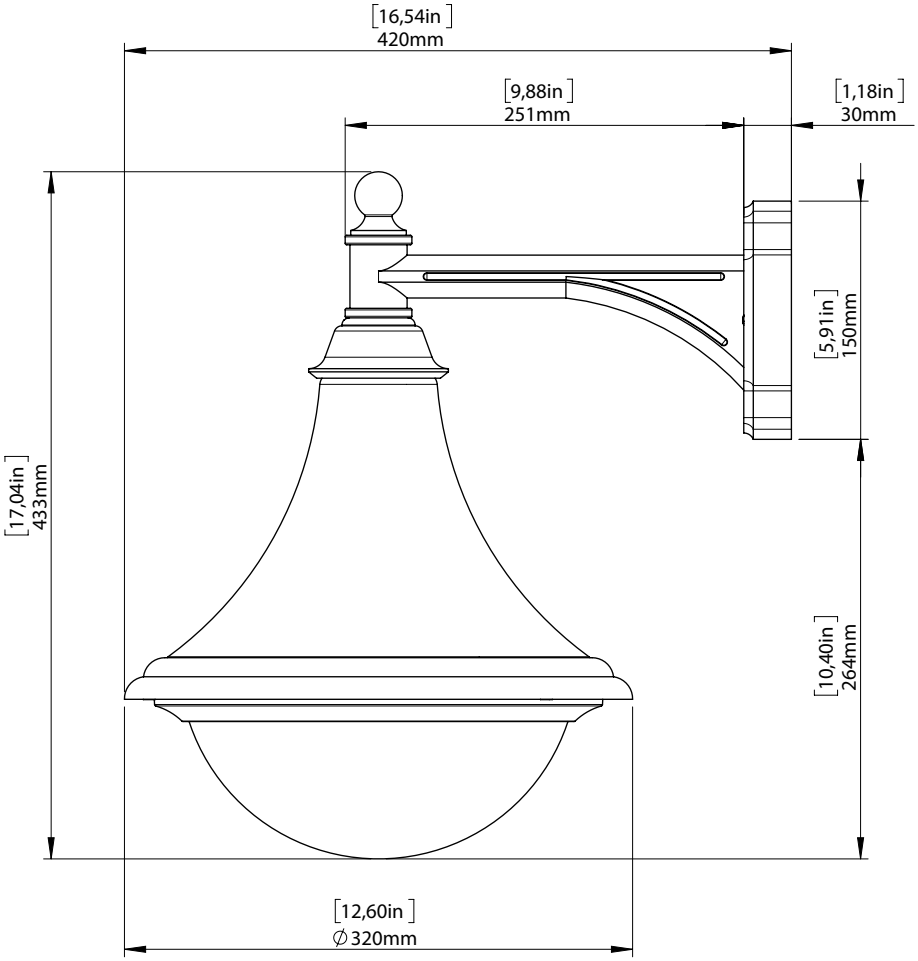

Dallas - PE119 - Model 4

: Cable passage

Measurement unit: millimetres / inches