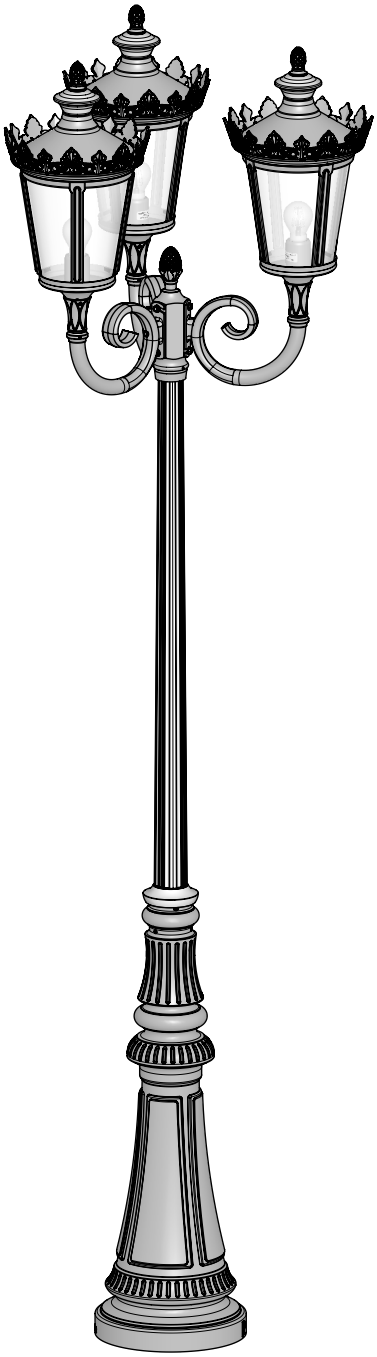

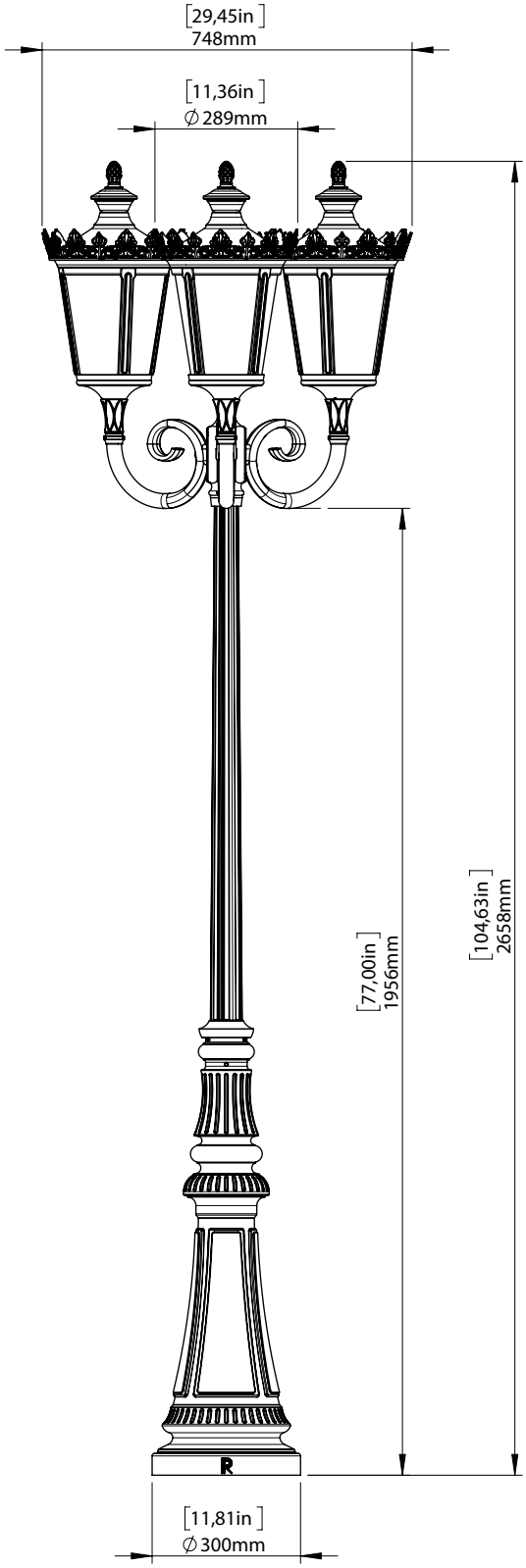

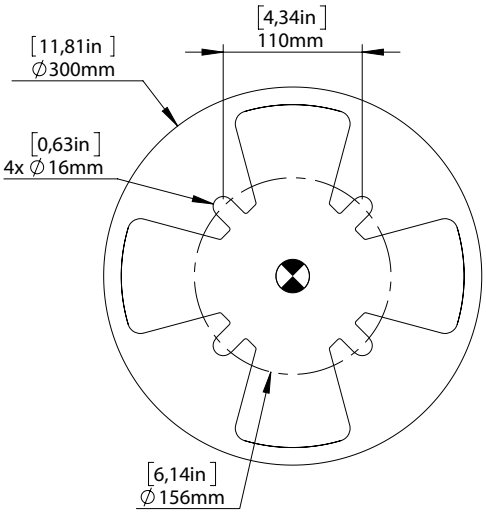

Louvre - MA133 - Model 10

: Cable passage

Measurement unit: millimetres / inches